METAL-FAB® INC.

DESIGN MANUAL

• CORR/GUARD® Special Gas Vent

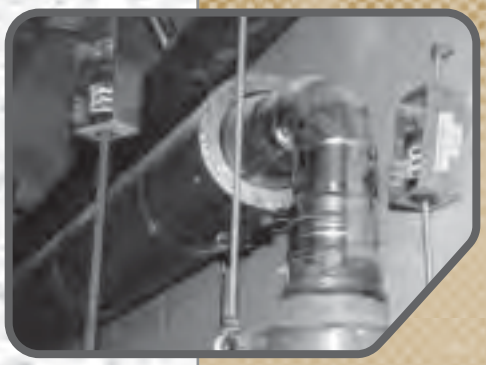

TABLE OF CONTENTS

GENERAL INFORMATION 2
CODES & STANDARDS 2
TECHNICAL DATA ..... 3 & 4
SAMPLE INSTALLATIONS ..... 4 & 5
3” - 5” DIAMETER FEATURE/BENEFITS 6
3” - 5” DIAMETER COMPONENTS ..... 7 - 11
6” - 24” DIAMETER FEATURE/BENEFITS 12
6” - 24” DIAMETER COMPONENTS ..... 13 - 22
SAMPLE SPECIFICATIONS 23

GENERAL INFORMATION

Pertinent information is consolidated in this publication to assist you with application information, codes and standards, dimensional information, support requirements and other data of special interest. It is our goal to enable you to select the proper product to meet the requirements of your project confidently and efficiently. For additional information you may contact us via:

Web Site: www.metal-fabinc.com
Telephone: 316-943-2351
Toll Free Phone: 800-835-2830
Fax: 316-943-2717
E-mail: info@metal-fabinc.com

Complete information for proper and safe installations is found in the Metal-Fab Installation Instructions for each product.

This design manual contains data to assist in the proper selection, design, and layout of venting systems using Metal-Fab models:

CG-Double Wall Low Pressure Vent **CGSW**-Single Wall Low Pressure Vent

CODES AND STANDARDS

Corr/Guard is listed to UL 1738, Standard for Venting Systems for Gas-Burning Appliances, Categories II, III, and IV. These requirements cover venting systems intended for venting Category II, III, and IV gas-burning appliances as defined by the Standard for Gas-Fired Central Furnaces (except Direct Vent Central Furnaces), ANSI Z21.47 and the National Fuel Gas Code, NFPA 54. Venting systems covered by these requirements are intended to be used with Category II, III, and IV appliances that have been installed in accordance with NFPA 54, and with codes such as the BOCA National Mechanical Code, the Standard Mechanical Code, the Uniform Mechanical Code, and local codes.

c UL US
MH26687

Corr/Guard vent material is AL29-4C® or equivalent superferritic stainless steel. This vent is intended for use wherever appliance manufacturers specify superferritic stainless steel as the required vent material and, vent gas temperatures do not exceed those listed in the Metal-Fab Installation Instructions and the Application section of this manual.

New York City, NY MEA Approval No. 78-00-E

Venting system design may be limited by appliance performance. Consult appliance installation instructions to determine limitations such as maximum horizontal length, maximum vertical height, elbow and offset limitations, and number of appliances permitted in a common vent.

CORR/GUARD APPLICATION INFORMATION

PRODUCT MODEL	CG-Double Wall
Diameters	3" (76mm)-24" (610mm)
Max. Operating Temperature	550°F (288°C)
Max. Operating Pressure 3" (76mm)-5" (127 mm) 6" (153mm)-24" (610mm)	 10" (254 mm) w.g. 6" (153 mm) w.g.
Clearance to Combustibles HORIZONTAL-Enclosed 3" (76mm)-5" (127 mm) 6" (153mm)-24" (610mm)	 300 F (149 C)-3" (76 mm) 480 F (249 C)-6" (153 mm) 550 F (288 C)-N/A Do Not Enclose
Clearance to Combustibles HORIZONTAL-Unenclosed 3" (76mm)-12" (305mm) 14" (356mm)-24" (610mm)	 550 F (288 C)-1" (25mm) 550 F (288 C)-5" (127mm)
Clearances to Combustibles VERTICAL-Enclosed 3" (76mm)- 24" (610mm)	 480 F (249 C)- 1" (25 mm) 550 F (288 C)-N/A
Clearance to Combustibles VERTICAL-Unenclosed 3" (76mm)-12" (305mm) 14" (356mm)-24" (610mm)	 550 F (288 C)-1" (25mm) 550 F (288 C)-5" (127mm)
Sealant 3" (76mm)-5" (127 mm) 6" (153mm)-24" (610mm)	 No Sealant Required Metal-Fab P077

PRODUCT MODEL	CGSW-Single Wall
Diameters	3" (76mm)-24" (610mm)
Max. Operating Temperature	550°F (288°C)
Max. Operating Pressure 3" (76mm)-5" (127 mm) 6" (153mm)-24" (610mm)	 10" (254 mm) w.g. 6" (153 mm) w.g.
Clearance to Combustibles HORIZONTAL-Enclosed 3" (76mm)-4" (102mm) 5" (127 mm)-24" (610 mm)	 480 F (249 C)-8" (203mm) 550 F (288C)- N/A Do Not Enclose
Clearance to Combustibles HORIZONTAL-Unenclosed 3" (76mm)-5" (127 mm) 6" (153mm)-12" (325 mm) 14" (356mm)-24" (610mm)	 400 F (204 C)-1" (25mm) 550 C (288 C)-2" (51mm) 550 F (288 C)-2" (51mm) 550 F (288 C)-6" (153 mm)
Clearances to Combustibles VERTICAL-Enclosed 3" (76mm)-4" (102mm) 5" (127mm) 6" (153mm)-24" (610mm)	 480 F (249 C)-4" (102 mm) 550 F (288 C)-N/A 550 F (288C)-6" (152mm) Do Not Enclose
Clearance to Combustibles VERTICAL-Unenclosed 3" (76mm)-5" (127 mm) 6" (153mm)-12" (325 mm) 14" (356mm)-24" (610mm)	 400 F (204 C)-1" (25mm) 550 C (288 C)-2" (51mm) 550 F (288 C)-2" (51mm) 550 F (288 C)-6" (153 mm)
Sealant 3" (76mm)-5" (127 mm) 6" (153mm)-24" (610mm)	 No Sealant Required Metal-Fab P077

MATERIAL SELECTIONS			
MODEL	FLUE	CASING	CTO**
CGSW-Single	AL29-4C*	N/A	CA0
Wall CG-Double Wall	AL29-4C*	Aluminized Steel 430 Stainless Steel 304 Stainless Steel 316 Stainless Steel	CA0 C30 C40 C60

* AL29-4C Superferritic stainless steel or equivalent

** CTO: Configured To Order. The 1st digit identifies the flue material, the 2nd digit identifies the casing material, and the third digit indicates "Air insulated".

MATERIAL THICKNESS	
Corr/Guard –Double Wall (CG)	
Flue 3" (76mm)-12" (305mm) 14" (356mm)-24" (610mm)	 0.015" (0.38mm) 0.024" (0.61mm)
Casings (All Materials) 3" (76mm)-12" (305mm) 14" (356mm)-24" (610mm)	 0.018" (0.46mm) 0.024" (0.61mm)

Corr/Guard-Single Wall (CGSW)	
Flue 3" (76mm)-12" (305mm) 14" (356mm)-24" (610mm)	 0.015" (0.38mm) 0.024" (0.61mm)
Casing	Not Applicable

DESIGN CONSIDERATIONS

When venting gas appliances always consult the appliance installation instructions. Horizontal runs, elbows, offsets, vertical height, etc. may be limited.

HORIZONTAL RUNS:

Slope must be at least 1/4" : 12" (6mm : 305mm). Neutral or negative pressure installations must slope upward, away from the appliance. Positive pressure systems may slope upward or downward. Always provide for condensate drainage where required.

HORIZONTAL SUPPORT LIMITS		
SUPPORT LOCATIONS	**DIAMETERS (CG & CGSW)**	**DISTANCE BETWEEN SUPPORTS**
Wall Penetrations	3" (76mm)-5" (127mm) 6" (153mm)-24" (610mm)	7.0' (2.1m) 6.0' (1.8m)
Horizontal Runs and Between Elbows	3" (76mm)-5" (127mm) 6" (153mm)-24" (610mm)	7.0' (2.1m) 6.0' (1.8m)

Plumbers strap may be used for horizontal support when fastened to rigid structures. Vent shall be supported to maintain positive condensate flow to drain point(s). Support to eliminate pooling of condensate.

VERTICAL RUNS:

Vertical supports are to be used after each transition to vertical and as required by the vertical support limits. Vertical support is required after every offset to prevent vertical loading on elbows.

SUPPORT METHOD	DIAMETERS (CG & CGSW)	DISTANCE BETWEEN SUPPORTS
Plate Support / Firestop Plate Support	3" (76mm)-5" (127mm) 6" (153mm)-12" (305mm) 14" (356mm)-24" (610mm)	30' (9m) 30' (9m) 20' (6m)
Wall Support	3" (76mm)-5" (127mm) Interior Exterior 6" (153mm)-24" (610mm) Interior Exterior	 30' (9m) 6' (1.8m) 30' (9m) 8' (2.5m)

TERMINATIONS

All terminations must comply with NFPA 54 / ANSI Z223.1, National Fuel Gas Code. Always consult the Authority Having Jurisdiction for any local requirements.

Horizontal:

Termination must be at least 12" (305mm) above the ground and above the snow line where applicable. Do not locate in traffic areas such as walkways unless at least 7' (2.1m) above ground level.
6' (1.8m) away from any combustion air inlet.
3' (0.91m) from any building opening, gas utility meter, gas service regulator, or the like.

Vertical:

All vents shall terminate at least 3' (.091m) above the roof and 2' (0.61m) above any portion of the structure within 10' (3m).

Metal-Fab Installation Instructions may be consulted for detailed information.

SIDEWALL EXHAUST

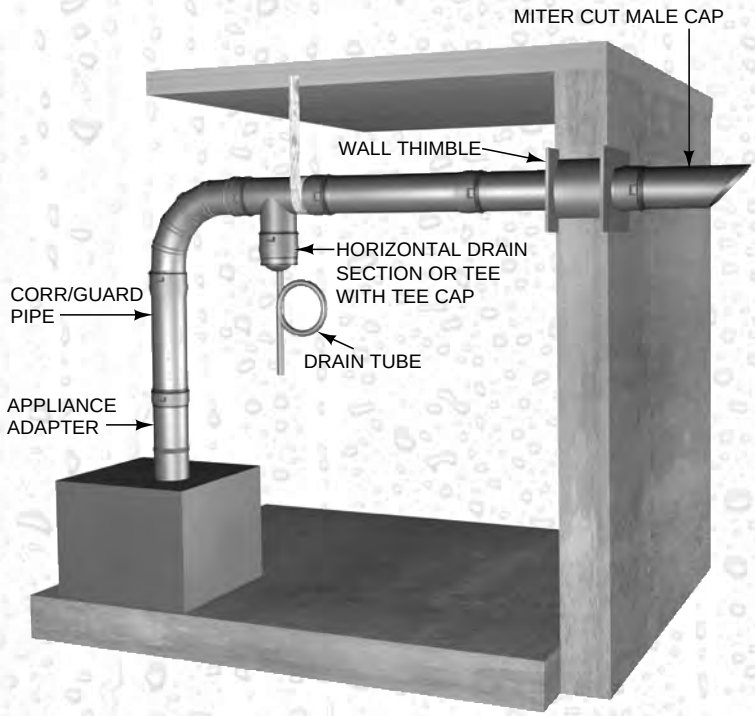

ROOF EXHAUST

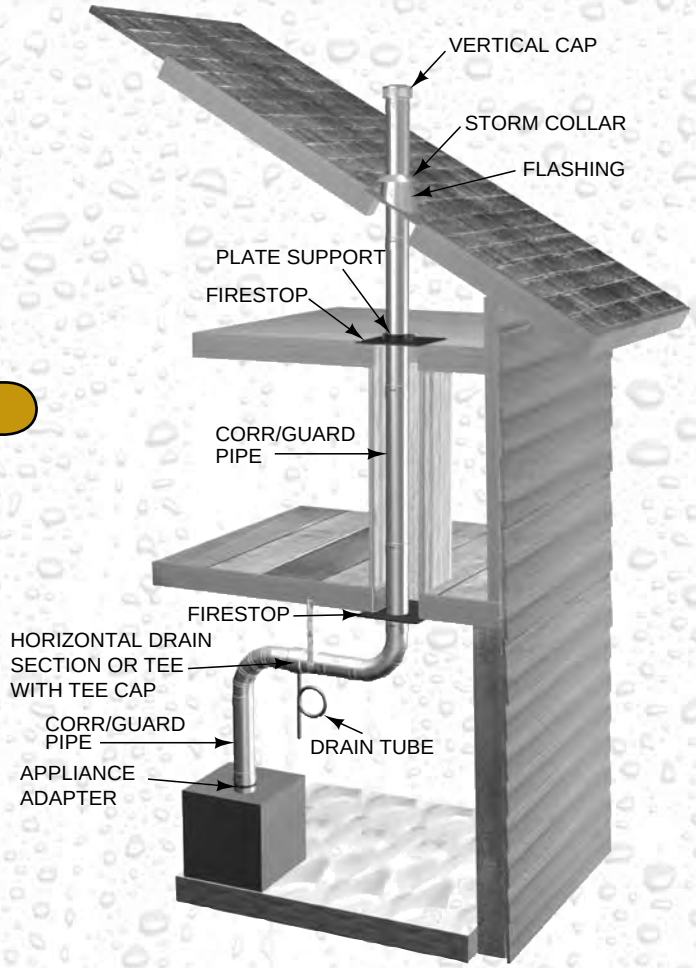

MULTI-UNIT EXHAUST

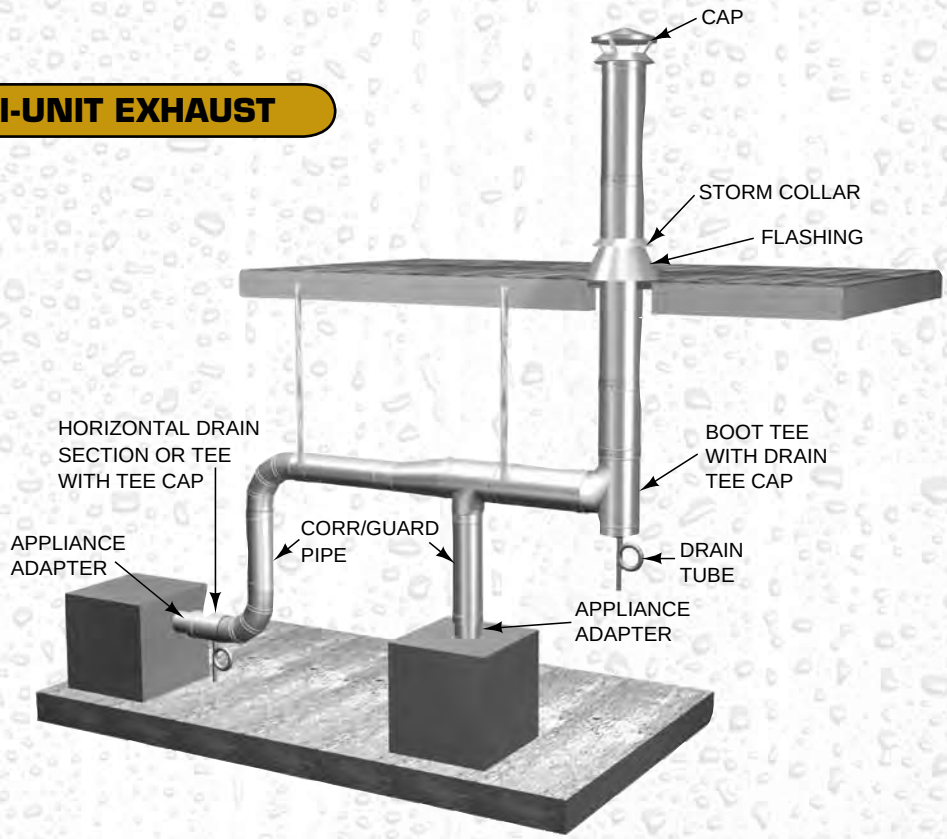

3"-4"-5" Diameter Corr/Guard® makes your job easier with exclusive benefits... the Gold Standard of Special Gas Vent!

FAST, EASY INSTALLATION

One-step connection and snap lock - just slide together until it "clicks" tight, no tools required.
Fewer supports required on horizontal runs.

NO SAGGING

Tight overlap and lock prevent sag and "wobble".
Fewer supports needed.

LEAKPROOF GOLD SEAL

Seamless, precision formed "gold seal" gasket.
Close tolerance pipe.
Snap lock.

PRECISION ENGINEERED GOLD QUALITY

Gasket is molded to fit, not extruded/spliced.
Continuous weld inside the flue on elbows, not taped.
TIG welded pipe.
Consistently close tolerances.
Pressure rated to 10 inches of water column.
AL29-4C® or equivalent stainless steel.
UL Listed - tested and labeled to UL1738 for Category II, III & IV appliances.
Limited Lifetime Warranty.

FULL LINE

Complete selection of components.

MULTIPLE APPLICATIONS

Single Wall Special Vent Pipe
Double Wall Special Vent Pipe

One-step connection... fastest on the market!

Just push together until the snap-lock tabs "click" into locked position, your assurance of a leak-free connection.

AL29-4C® is a registered trademark of ATI Properties, Inc.

3”– 5” DIAMETERS CORR/GUARD

NOTE: Corr/Guard pipe overlaps 2.25” when joined together, therefore assembled length is 2.25” less than listed length.

CG = DOUBLEWALL CGSW = SINGLEWALL

STRAIGHT LENGTH

I.D.	A	B
3.00	5.00	5.66
3.00	5.00	11.66
3.00	5.00	17.66
3.00	5.00	23.66
3.00	5.00	35.66
3.00	5.00	47.66*
4.00	6.00	5.66
4.00	6.00	11.66
4.00	6.00	17.66
4.00	6.00	23.66
4.00	6.00	35.66
4.00	6.00	47.66*
5.00	7.00	5.66
5.00	7.00	11.66
5.00	7.00	17.66
5.00	7.00	23.66
5.00	7.00	35.66
5.00	7.00	47.66*

*NOT AVAILABLE IN CG DOUBLEWALL

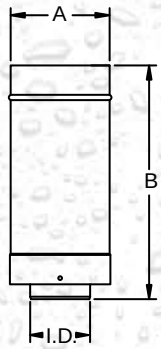

MALE TO MALE ADAPTER - (DMA)

I.D.	A
3.00	5.00
4.00	6.00
5.00	7.00

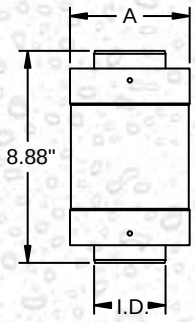

STRAIGHT LENGTH W/SCREEN

TERMINATION

MALE (HTM)

I.D.
3.00
4.00
5.00

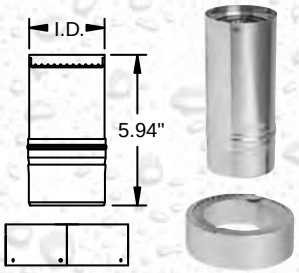

FEMALE (HTF)

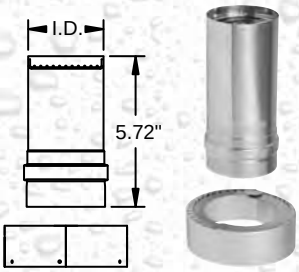

VARIABLE LENGTH

(VL10)

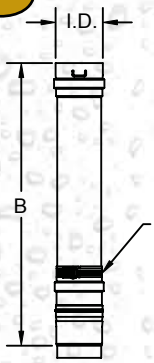

(VL22)

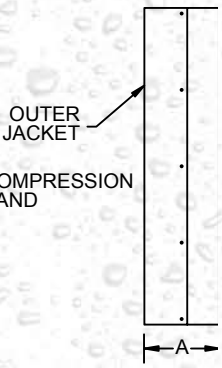

VL10

I.D.	A	B
3.00	5.00	7.50 TO 10.00
4.00	6.00	7.50 TO 10.00
5.00	7.00	7.50 TO 10.00

VL22

3.00	5.00	7.50 TO 22.00
4.00	6.00	7.50 TO 22.00
5.00	7.00	7.50 TO 22.00

FEMALE TO FEMALE ADAPTER - (DFA)

I.D.	A
3.00	5.00
4.00	6.00
5.00	7.00

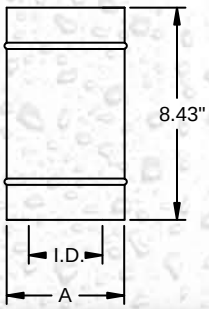

3”– 5” DIAMETERS CORR/GUARD

NOTE: Corr/Guard pipe overlaps 2.25” when joined together, therefore assembled length is 2.25” less than listed length.

90° ELBOW - (90L)

I.D.	A
3.00	5.00
4.00	6.00
5.00	7.00

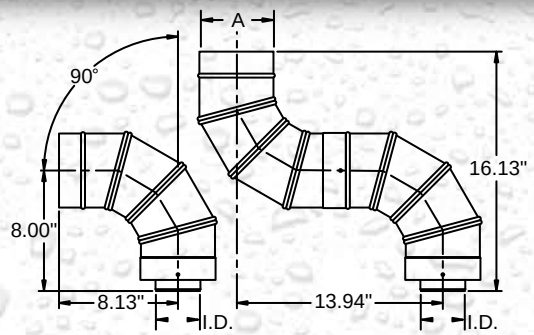

90° ELBOW W/SCREEN

TERMINATION

MALE (90LTM)

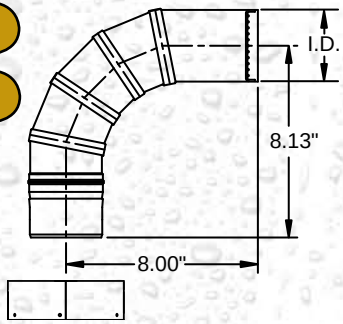

FEMALE (90LTF)

I.D.
3.00
4.00
5.00

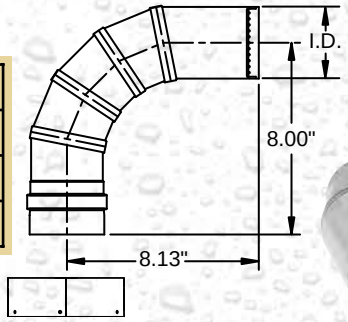

45° ELBOW - (45L)

I.D.	A
3.00	5.00
4.00	6.00
5.00	7.00

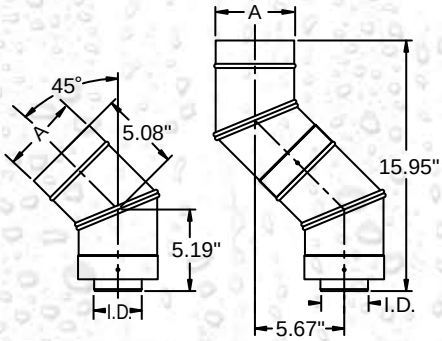

90° TEE - (T)

I.D.	O.D.	A	B
3.00	5.00	10.00	9.25
4.00	6.00	11.00	10.25
5.00	7.00	12.00	11.25

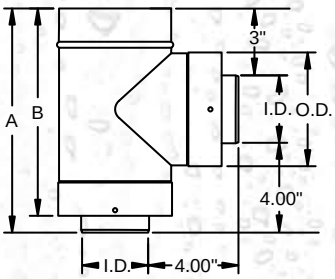

TERMINATION TEE W/SCREEN

MALE (TTM)

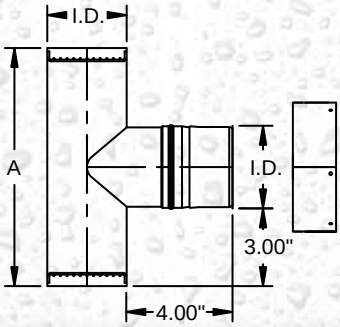

FEMALE (TTF)

I.D.	A
3.00	9.00
4.00	10.00
5.00	11.00

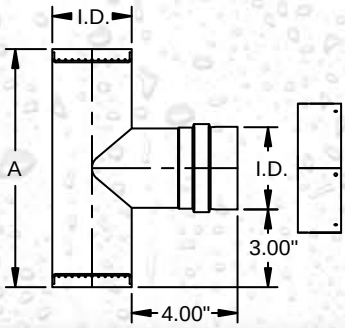

NOTE: Corr/Guard pipe overlaps 2.25” when joined together, therefore assembled length is 2.25” less than listed length.

TEE CAP

W/O DRAIN FITTING - (TCN)

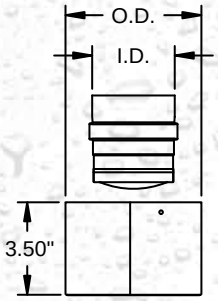

I.D.	O.D.
3.00	5.00
4.00	6.00
5.00	7.00

W/ DRAIN FITTING - (TC)

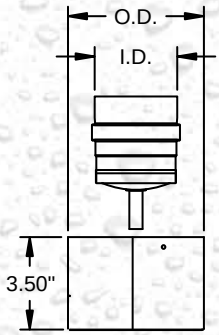

BOOT TEE - (BT)

I.D.	A	B
3.00	5.00	11.50
4.00	6.00	12.50
5.00	7.00	13.50

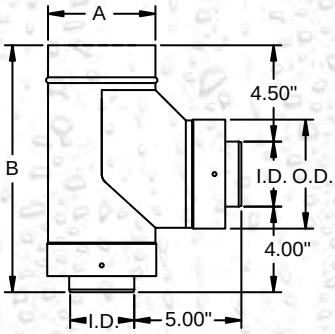

HORIZONTAL DRAIN SECTION - (DS)

I.D.	A
3.00	5.00
4.00	6.00
5.00	7.00

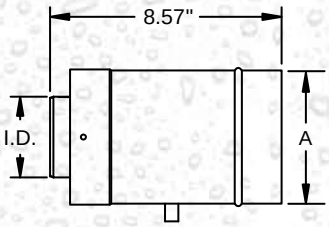

VERTICAL CAP - (C)

I.D.	A
3.00	8.25
4.00	8.25
5.00	10.00

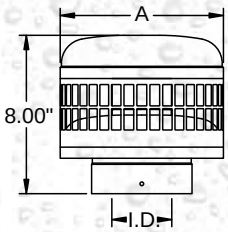

TERMINATION MITER CUT

MALE CUT - (MCM)

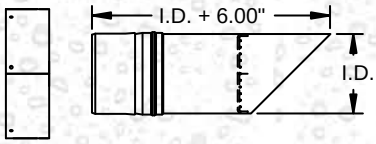

I.D.
3.00
4.00
5.00

FEMALE CUT - (MCF)

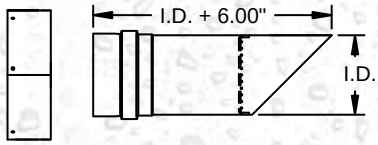

ECCENTRIC REDUCER - (ER)

A	B
4.00	3.00
5.00	4.00

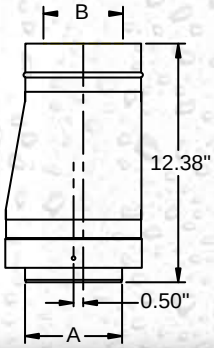

NOTE: Corr/Guard pipe overlaps 2.25” when joined together, therefore assembled length is 2.25” less than listed length.

ECCENTRIC INCREASER

TO 4”& 5” DIA. - (EI)

A	B	C
3.00	4.00	0.50
3.00	5.00	1.00
4.00	5.00	0.50

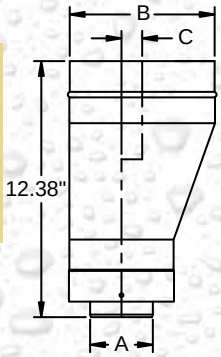

TO 6” DIA. - (EI6)

Note: 3”-6” Increaser is tapered with no offset.

I.D.	A
3.00	0.00
4.00	1.00
5.00	0.50

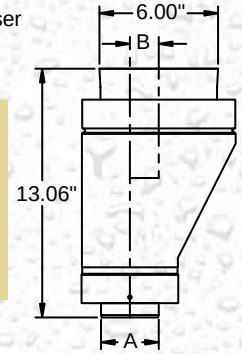

WALL THIMBLE - (WPK)

Adjusts from 4.5” to 7.5” wall thickness

CGSW			
A	B	C	D
3.16	12.00	5.81	7.81
4.16	13.00	6.81	8.81
5.16	14.00	7.81	9.81

CG			
A	B	C	D
5.16	12.00	7.81	N/A
6.16	13.00	8.81	N/A
7.16	14.00	9.81	N/A

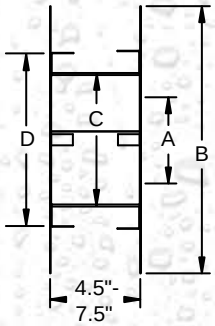

WALL SUPPORT - (WS)

CGSW		
O.D.	A	B
3.00	4.12	3.38
4.00	5.12	3.88
5.00	6.12	4.38

CG		
O.D.	A	B
5.00	6.12	3.38
6.00	7.12	3.88
7.00	8.12	4.38

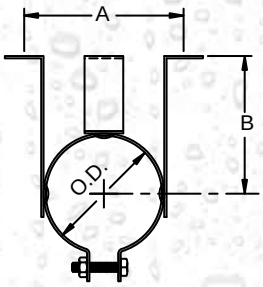

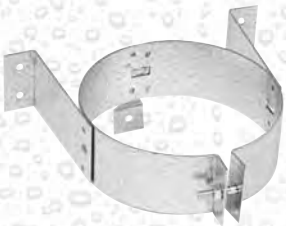

WALL HANGER - (WH)

CGSW		
O.D.	A	B
3.00	4.10	3.50
4.00	5.10	4.00
5.00	6.10	4.50

CG		
O.D.	A	B
5.00	6.10	3.50
6.00	7.10	4.00
7.00	8.10	4.50

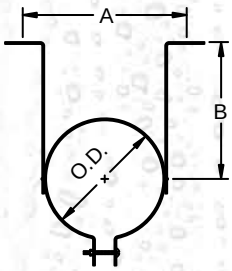

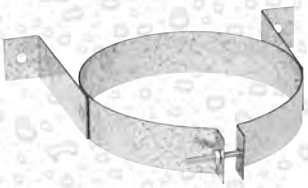

PLATE SUPPORT - (PS)

CGSW	
O.D.	A
3.00	17.00
4.00	17.00
5.00	25.00

CG	
O.D.	A
5.00	17.00
6.00	17.00
7.00	17.00

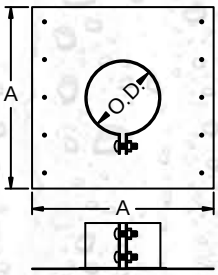

GUY RING - (GR)

CGSW	
O.D.	A
3.00	3.00
4.00	4.00
5.00	5.00

CG	
O.D.	A
5.00	5.00
6.00	6.00
7.00	7.00

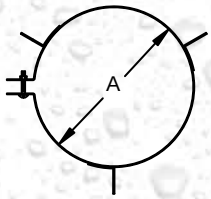

TALL CONE FLASHING - (FT)

CGSW	
A	B
3.50	14.63
4.50	14.63
5.50	19.63

CG	
A	B
5.50	14.63
6.50	17.50
7.50	19.00

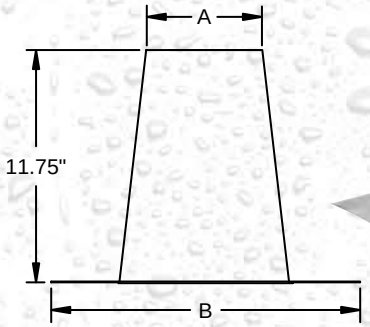

6/12 TO 12/12 PITCH FLASHING - (F-12)

CGSW	
A	B
3.50	20.00
4.50	20.00
5.50	20.00

CG	
A	B
5.50	W20 x L20
6.50	W21 x L28
7.50	W21 x L28

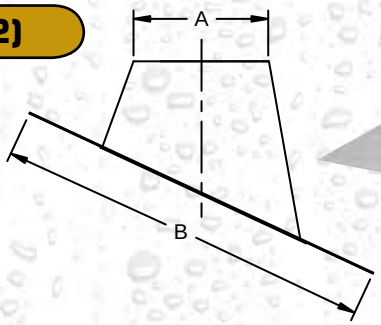

2/12 TO 5/12 PITCH FLASHING - (F)

CGSW	
A	B
3.50	14.63
4.50	14.63
5.50	19.63

CG	
A	B
5.50	14.63
6.50	17.50
7.50	19.00

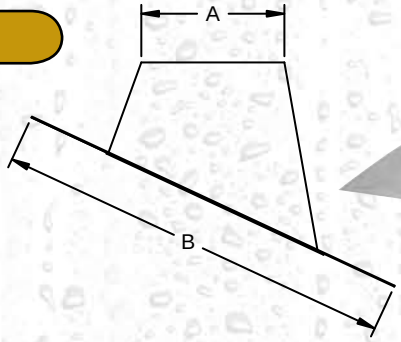

STORM COLLAR - (SC)

CGSW
A
3.00
4.00
5.00

CG
A
5.00
6.00
7.00

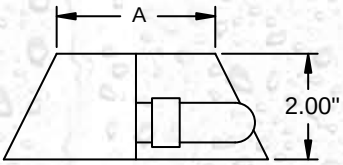

6” - 24” DIAMETERS CORR/GUARD FEATURE BENEFITS

PRECISION CONNECTIONS

Bell & socket design assures easy alignment & connection.

Minimal pressure required to assemble components.

HEAVY DUTY CLOSURE BANDS

Reduces support requirements.

Maintains rigidity.

AL29-4C OR EQUIVALENT STAINLESS STEEL FLUE

Exceeds corrosion resistance requirement in UL1738 - Standard for venting systems for gas-burning appliances, Catagories II, III, and IV.

EXPANDED CASING SELECTIONS

Choose the most cost effective materials for the environment.

- Aluminized Steel
- 430 Stainless Steel
- 304 Stainless Steel
- 316 Stainless Steel

6” - 24” COMMERCIAL/INDUSTRIAL PRODUCTS

NOTE: Lengths for all components are actual. **Deduct 1 1/2” (38mm) per joint for installed length.**

NOTE: Part numbers are composed of 6 (Diameter) CG (Corr/Guard Double Wall) OR CGSW (Corr/Guard Single Wall) and 36 (Description).
Sample part numbers: 6CG36 = 6” diameter Corr/Guard Double Wall 36” long vent length.

NOTE: I.D. = 6”-24” – in 2” Increments
O.D. = Flue Diameter + 2”

STRAIGHT LENGTHS

6” (153)
12” (305)
18” (458)
24” (610)
36” (661)

Flow Resistance K=.4 ($\frac{L}{D}$)

L= vent length in feet

D= vent diameter in inches

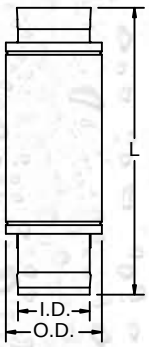

VARIABLE LENGTH 6” - (VL6)

Flow Resistance K = $.4(\frac{L}{D})$

L = vent length in feet

D = vent diameter in inches (see the chart above)

NOTE: Used to fill gaps between standard length components. Does not allow for expansion.

NOTE: Outer jacket used on double wall only.

INSTALLED LENGTH VL6

Minimum: **7 1/2”** (191)

Maximum: **10”** (254)

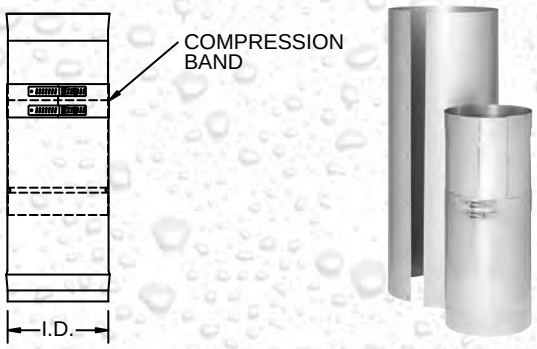

VARIABLE LENGTH 12” - (VL12)

Flow Resistance K = $.4(\frac{L}{D})$

L = vent length in feet

D = vent diameter in inches (see the chart above)

NOTE: Used to fill gaps between standard length components. Does not allow for expansion.

NOTE: Outer jacket used on double wall only.

INSTALLED LENGTH VL12

Minimum: **13 1/2”** (343)

Maximum: **22”** (559)

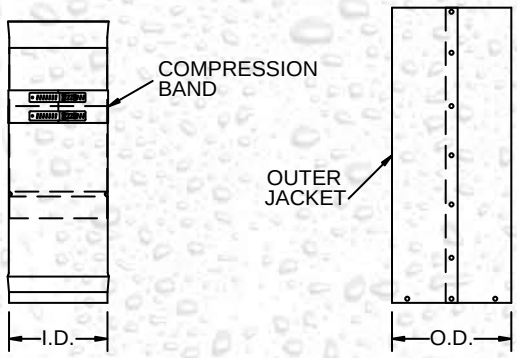

FEMALE TO FEMALE ADAPTER (DFA)

Flow Resistance K = $.4(\frac{L}{D})$

L= vent length in feet

D= vent diameter in inches (see Straight Length chart)

NOTE: Use on long horizontal runs to maintain proper slope for condensate drainage.

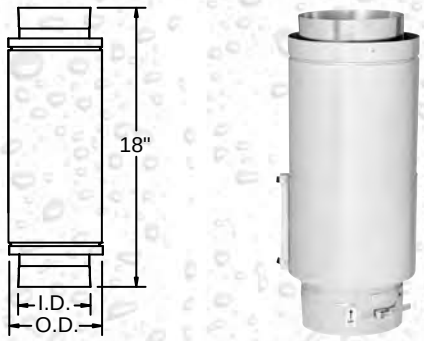

MALE TO MALE ADAPTER (DMA)

Flow Resistance K = $(\frac{L}{D})$

L= vent length in feet

D= vent diameter in inches (see Straight Length chart)

NOTE: Use on long horizontal runs to maintain proper slope for condensate drainage.

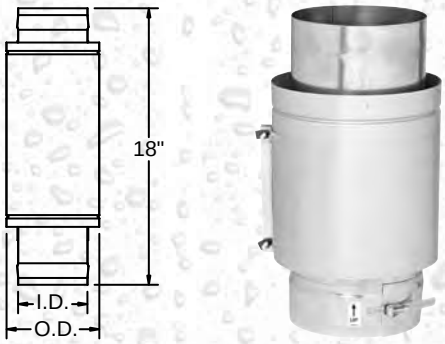

TAPERED INCREASER (TI)

Flow Resistance $K = \frac{.51\left[1-\left(\frac{A}{C}\right)^2\right]^2}{\left(\frac{A}{C}\right)^4}$

NOTE: The number of steps is determined by the number of vent sizes the Tapered Increaser enlarges. One step equals one pipe diameter increase.

NOTE: When ordering, specify both diameters with small diameter first (ie. 12CGTI16 for 12” to 16”)

A= vent diameter of small end in inches

C= vent diameter of large end in inches

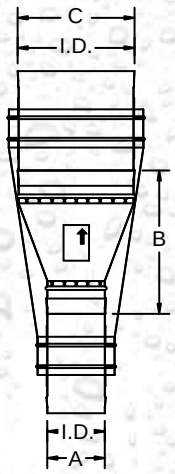

	1 Step	2 Step	3 Step	4 Step	5 Step	6 Step
B =	15”	15”	15”	20”	20”	20”

22° ELBOW (22L)

Flow Resistance K = 0.12

NOTE: Offsets for CGSW and CG are the same.

NOTE: Vertical rise per 12”(305) of horizontal offset is 29.7”(755).

VENT I.D.		A		B		C		D	
		CGSW / CG		CGSW / CG		CGSW / CG		CGSW / CG	
6”	(153)	**6.60**	(168)	**4.60**	(118)	**20.00**	(508)	**3.65**	(89)
8”	(204)	**6.80**	(173)	**4.80**	(123)	**20.75**	(527)	**3.80**	(97)
10”	(254)	**7.00**	(178)	**5.00**	(128)	**21.50**	(546)	**3.95**	(100)
12”	(305)	**7.20**	(183)	**5.20**	(133)	**22.25**	(565)	**4.10**	(104)
14”	(356)	**7.40**	(188)	**5.40**	(138)	**23.00**	(584)	**4.25**	(108)
16”	(407)	**7.60**	(193)	**5.60**	(143)	**23.75**	(603)	**4.40**	(112)
18”	(458)	**7.80**	(198)	**5.80**	(148)	**24.62**	(625)	**4.55**	(116)
20”	(508)	**8.00**	(203)	**6.00**	(153)	**25.37**	(644)	**4.70**	(119)
22”	(559)	**8.20**	(208)	**6.20**	(158)	**26.12**	(633)	**4.85**	(123)
24”	(610)	**8.40**	(213)	**6.40**	(163)	**26.87**	(682)	**5.00**	(127)

Dimensions in inches (mm).

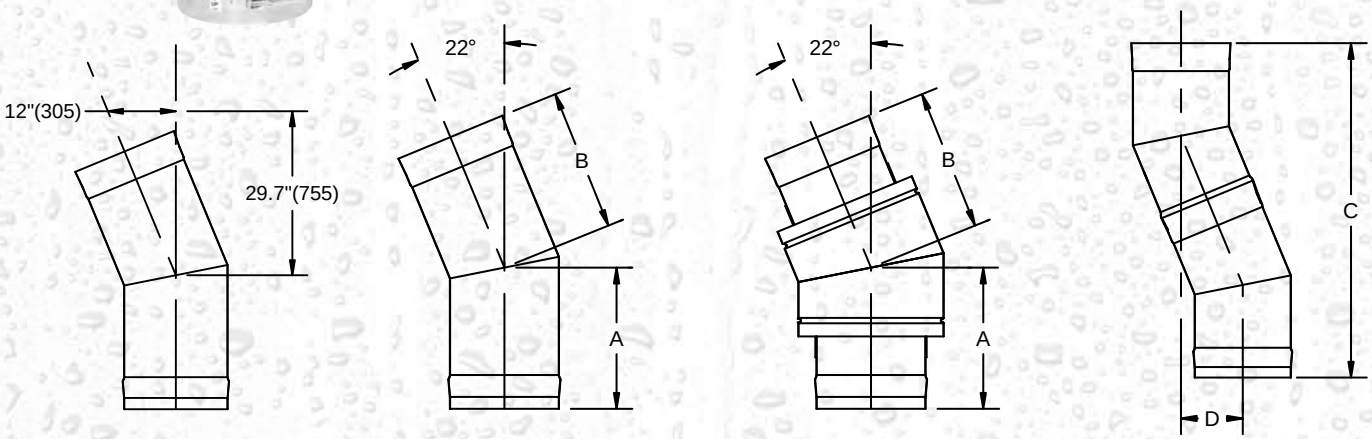

45° ELBOW (45L)

Flow Resistance K = 0.15

NOTE: Offsets for CGSW and CG are the same.

NOTE: Vertical rise per 12”(305) of horizontal offset is 12”(305).

VENT I.D.		A		B		C		D	
		CGSW / CG		CGSW / CG		CGSW / CG		CGSW / CG	
6”	(153)	**8.28**	(210)	**6.28**	(160)	**23.73**	(603)	**9.17**	(233)
8”	(204)	**8.70**	(221)	**6.70**	(170)	**25.15**	(639)	**9.75**	(248)
10”	(254)	**9.11**	(231)	**7.11**	(181)	**26.56**	(675)	**10.34**	(263)
12”	(305)	**9.52**	(242)	**7.52**	(191)	**27.98**	(711)	**10.92**	(277)
14”	(356)	**9.94**	(252)	**7.94**	(202)	**29.40**	(747)	**11.50**	(292)
16”	(407)	**10.35**	(263)	**8.35**	(212)	**30.82**	(772)	**12.08**	(307)
18”	(458)	**10.77**	(274)	**8.77**	(223)	**32.24**	(819)	**12.66**	(322)
20”	(508)	**11.18**	(284)	**9.18**	(233)	**33.66**	(855)	**13.24**	(366)
22”	(559)	**11.60**	(295)	**9.60**	(244)	**35.08**	(891)	**13.82**	(351)
24”	(610)	**12.00**	(305)	**10.00**	(254)	**36.50**	(927)	**14.40**	(366)

Dimensions in inches (mm).

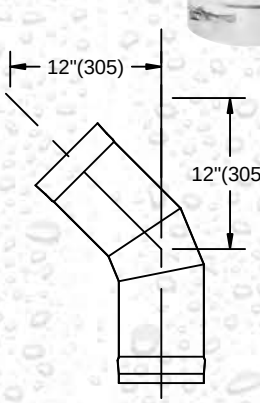

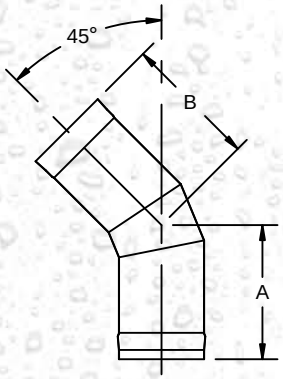

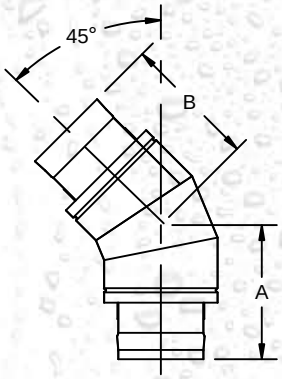

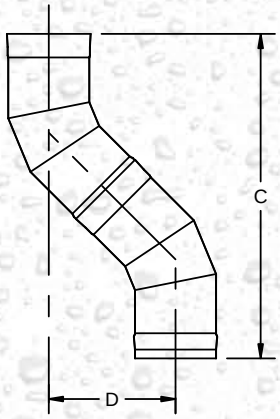

68° ELBOW (68L)

Flow Resistance K:

6” - 8” = 0.24

10” - 18” = 0.33

20” - 24” = 0.46

NOTE: Offsets are the same for CGSW and CG.

NOTE: Vertical rise per 12”(305) of horizontal offset is 4.8”(122).

VENT I.D.		A		B		C		D	
		CGSW / CG		CGSW / CG		CGSW / CG		CGSW / CG	
6”	(153)	**10.26**	(261)	**8.26**	(210)	**25.01**	(635)	**15.65**	(398)
8”	(204)	**10.93**	(278)	**8.93**	(227)	**26.86**	(682)	**16.88**	(429)
10”	(254)	**11.60**	(295)	**9.60**	(244)	**28.71**	(729)	**18.12**	(460)
12”	(305)	**12.27**	(312)	**10.27**	(261)	**30.56**	(776)	**19.35**	(491)
14”	(356)	**12.93**	(328)	**10.93**	(278)	**32.41**	(823)	**20.58**	(523)
16”	(407)	**13.60**	(345)	**11.60**	(295)	**34.26**	(870)	**21.81**	(554)
18”	(458)	**14.27**	(362)	**12.27**	(312)	**36.11**	(917)	**23.04**	(585)
20”	(508)	**14.94**	(379)	**12.94**	(329)	**37.96**	(964)	**24.27**	(616)
22”	(559)	**15.61**	(396)	**13.61**	(346)	**39.81**	(1011)	**25.50**	(648)
24”	(610)	**16.28**	(414)	**14.28**	(363)	**41.66**	(1058)	**26.73**	(679)

Dimensions in inches (mm).

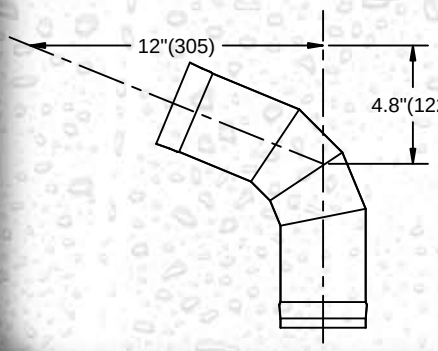

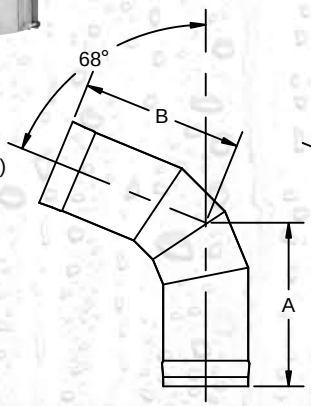

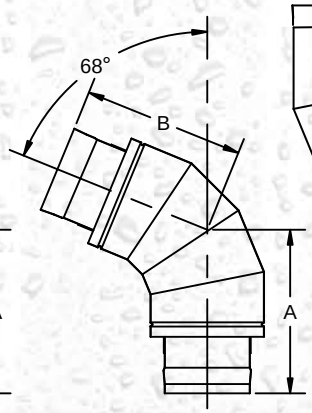

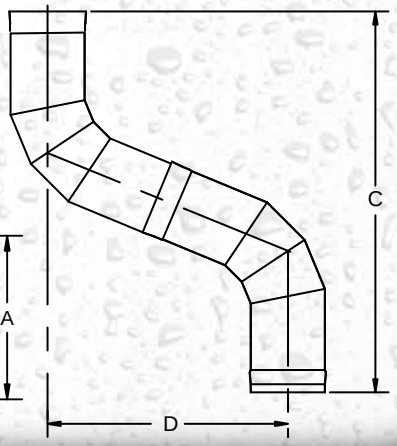

90° ELBOW (90L)

Flow Resistance K:

6” - 8” = 0.24

10” - 18” = 0.33

20” - 24” = 0.46

NOTE: Offsets for CGSW and CG are the same.

VENT I.D.		A		B		C		D	
		CGSW / CG		CGSW / CG		CGSW / CG		CGSW / CG	
6”	(153)	**12.87**	(326)	**10.87**	(276)	**23.75**	(603)	**22.25**	(565)
8”	(204)	**13.87**	(352)	**11.87**	(301)	**25.75**	(654)	**24.25**	(616)
10”	(254)	**14.87**	(378)	**12.87**	(326)	**27.75**	(705)	**26.25**	(667)
12”	(305)	**15.87**	(403)	**13.87**	(352)	**29.75**	(756)	**28.25**	(718)
14”	(356)	**16.87**	(428)	**14.87**	(378)	**31.75**	(806)	**30.25**	(768)
16”	(407)	**17.87**	(454)	**15.87**	(403)	**33.75**	(857)	**32.25**	(819)
18”	(458)	**18.87**	(479)	**16.87**	(428)	**35.75**	(908)	**34.25**	(870)
20”	(508)	**19.87**	(505)	**17.87**	(454)	**37.75**	(959)	**36.25**	(921)
22”	(559)	**20.87**	(530)	**18.87**	(479)	**39.75**	(1010)	**38.25**	(972)
24”	(610)	**21.87**	(555)	**19.87**	(505)	**41.75**	(1060)	**40.25**	(1022)

Dimensions in inches (mm).

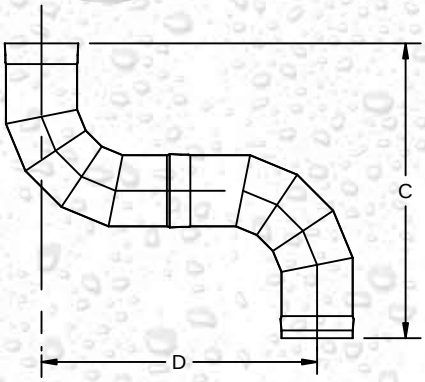

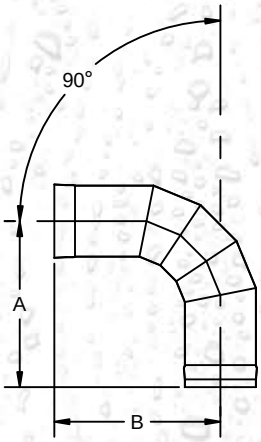

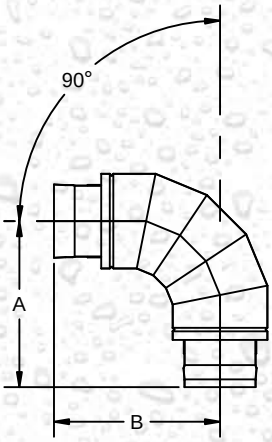

90° MANIFOLD TEE (T)

Flow Resistance K = 1.25

A = Vent I.D.

B = Tap I.D.

C = “B” + 12”(305)

D = “B” + 2”(51)

E = “B” + 6.875”(175)

F = “A” + 2”(51)

NOTE: Reducing taps are available. Specify Tap Diameter at time of order.

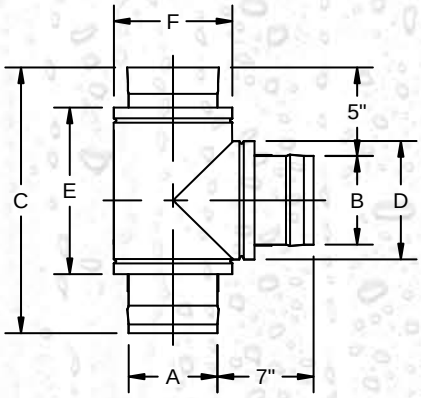

BOOT TEE (BT)

Available through 24” dia.

Flow Resistance K = 0.4

A = Vent I.D.

B = Tap I.D.

C = “B” + 13”(330)

D = “B” + 2”(51)

E = “B” + 7.875”(200)

F = “A” + 2”(51)

NOTE: Used to lower flow resistance into vertical or horizontal run. Specify Tap Diameter at time of order.

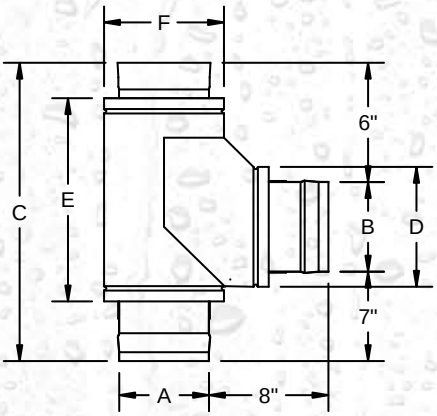

BOOT TEE DRAIN SECTION (BTD)

Available through 24” dia.
Flow Resistance K = 0.4

A = Vent I.D.
B = Tap I.D.
C = “E” + 3”(76)
D = “B” + 2”(51)
E = “B” + 7.875”(200)
F = “A” + 2”(51)

NOTE: Used to lower flow resistance into vertical or horizontal run. Specify Tap Diameter at time of order.

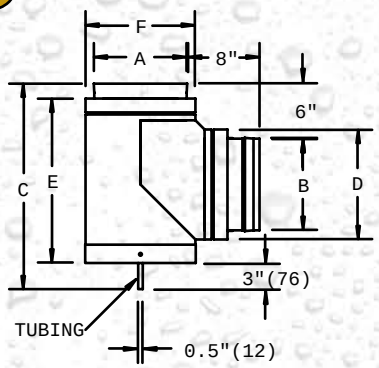

DRAIN TEE CAP W/ CASING END CLOSURE (TC)

NOTE: Used to close and seal unused port of Tee Section (T/BT).

NOTE: Casing end closure not included with CGSW - single wall Cap.

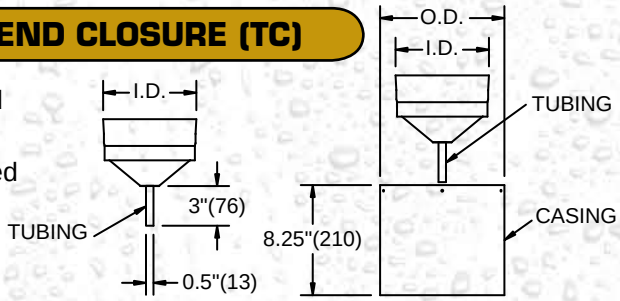

TEE CAP LESS DRAIN W/ CASING END CLOSURE (TCN)

NOTE: Used to close and seal unused port of Tee Section (T/BT).

NOTE: Casing end closure not included with CGSW - single wall Cap.

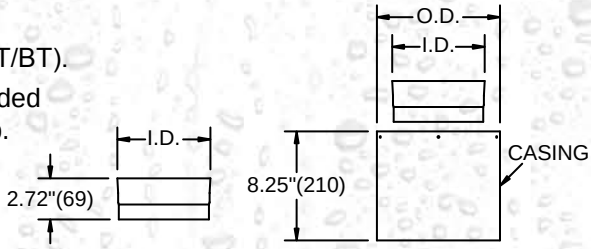

DRAIN SECTION (DS)

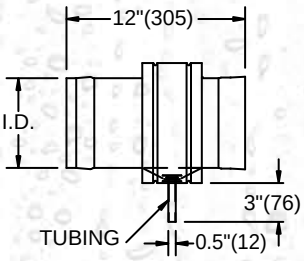

VERTICAL DRAIN SECTION (VDS)

A = I.D.+ 2”

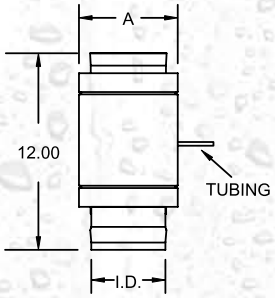

CASING END CLOSURE (CEC)

NOTE: Used to close space between vent and casing.

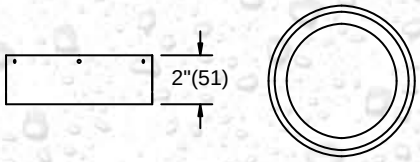

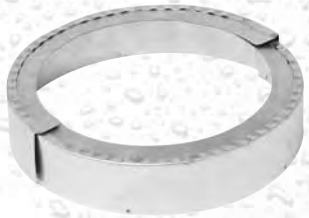

STACK CAP (C)

Flow resistance K = 0.5

NOTE: Provides partial rain protection. Use of Drain Tee Cap (TC) or Drain Section (DS) is recommended.

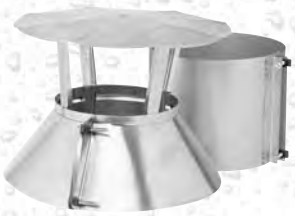

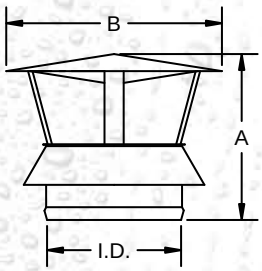

PIPE I.D.		A		B	
6”	(153)	**9.50”**	(241)	**11”**	(280)
8”	(204)	**11.50”**	(292)	**14”**	(356)
10”	(254)	**13.50”**	(343)	**17”**	(432)
12”	(305)	**14.50”**	(368)	**21”**	(534)
14”	(356)	**15.50”**	(394)	**24”**	(610)
16”	(407)	**17.50”**	(445)	**28”**	(712)
18”	(458)	**18.50”**	(470)	**31”**	(788)
20”	(508)	**20.50”**	(521)	**34”**	(864)
22”	(559)	**21.50”**	(546)	**38”**	(965)
24”	(610)	**23.50”**	(597)	**41”**	(1041)

Dimensions in inches (mm).

MITER CUT (MC)

NOTE: Used for horizontal termination. Standard with bird screen.

NOTE: Double wall vent includes casing end closure.

NOTE: MCM (male) (if sloped back to the appliance) MCF (female) (used with the DMA component, sloped towards termination).

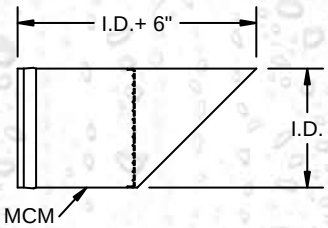

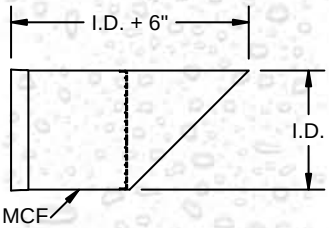

TALL CONE FLASHING (F)

NOTES:

1. Used for flat roof applications.
2. Order Storm Collar separately.

PIPE I.D.		CGSW				CG			
		A		B		A		B	
6”	(153)	**12”**	(305)	**24”**	(610)	**14”**	(356)	**26”**	(661)
8”	(204)	**14”**	(356)	**26”**	(661)	**16”**	(407)	**28”**	(712)
10”	(254)	**16”**	(407)	**28”**	(712)	**18”**	(458)	**30”**	(762)
12”	(305)	**18”**	(458)	**30”**	(762)	**20”**	(508)	**32”**	(813)
14”	(356)	**20”**	(508)	**32”**	(813)	**22”**	(559)	**34”**	(864)
16”	(407)	**22”**	(559)	**34”**	(864)	**24”**	(610)	**36”**	(915)
18”	(458)	**24”**	(610)	**36”**	(915)	**26”**	(661)	**38”**	(966)
20”	(508)	**26”**	(661)	**38”**	(966)	**28”**	(712)	**40”**	(1016)
22”	(559)	**28”**	(712)	**40”**	(1016)	**30”**	(762)	**42”**	(1067)
24”	(610)	**30”**	(762)	**42”**	(1067)	**32”**	(813)	**44”**	(1118)

Dimensions in inches (mm).

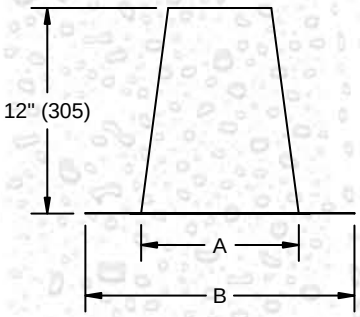

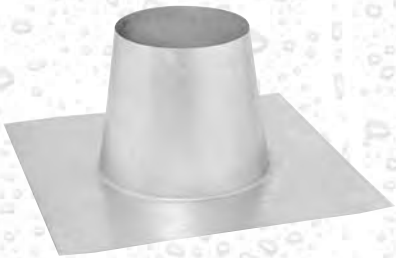

FIXED PITCH FLASHING (FPF)

NOTES:

1. X=PITCH RATE, Available Rates 1/12 - 12/12. Please specify pitch rate with order.
2. Variable pitch flashing is available in sizes from 6” to 24”, inclusive.
3. Order storm collar separately.
4. A = 0.813 for CGSW
   A = 2.813 for CG

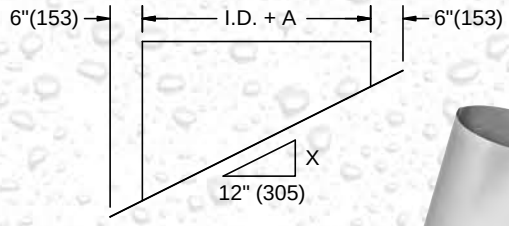

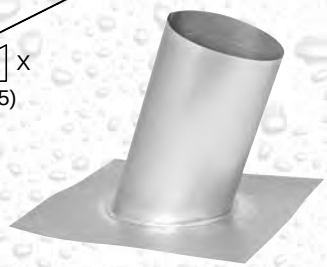

STORM COLLAR (SC)

A = Vent Diameter (O.D.)

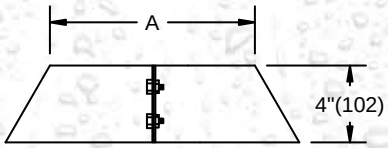

WALL PENETRATOR (WPK)

NOTE: Used for horizontal penetrations.

Framing dimension I.D. + 6”

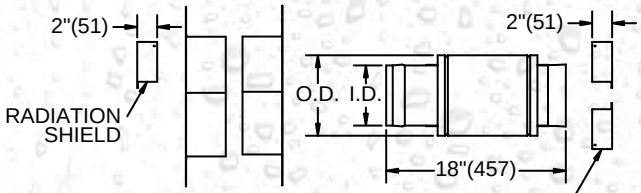

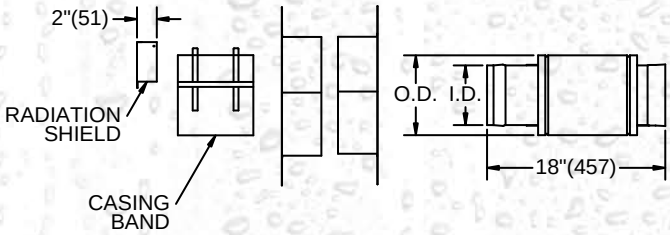

FIRESTOP (FS)

PIPE I.D.		CGSW				CG			
		A		B		A		B	
6”	(153)	**16”**	(407)	**16”**	(407)	**18”**	(458)	**18”**	(458)
8”	(204)	**18”**	(458)	**18”**	(458)	**20”**	(508)	**20”**	(508)
10”	(254)	**20”**	(508)	**20”**	(508)	**22”**	(559)	**22”**	(559)
12”	(305)	**22”**	(559)	**22”**	(559)	**24”**	(610)	**24”**	(610)
14”	(356)	**24”**	(610)	**24”**	(610)	**26”**	(661)	**26”**	(661)
16”	(407)	**26”**	(661)	**26”**	(661)	**28”**	(712)	**28”**	(712)
18”	(458)	**28”**	(712)	**28”**	(712)	**30”**	(762)	**30”**	(762)
20”	(508)	**30”**	(762)	**30”**	(762)	**32”**	(813)	**32”**	(813)
22”	(559)	**32”**	(813)	**32”**	(813)	**34”**	(864)	**34”**	(864)
24”	(610)	**34”**	(864)	**34”**	(864)	**36”**	(915)	**36”**	(915)

Dimensions in inches (mm).

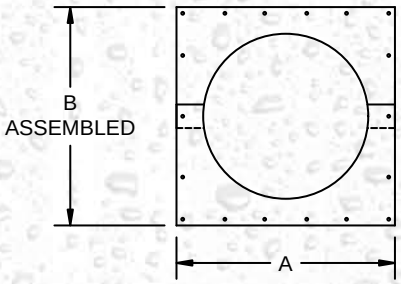

WALL BAND (WB)

The wall band is used to secure the vent to interior walls, maintaining clearance and providing alignment. Do not exceed 8 ft. distance between bands.

PIPE I.D.		CGSW				CG			
		A		B		A		B	
6”	(153)	**5.00**	(127)	**7.07**	(180)	**6.00**	(153)	**9.07**	(230)
8”	(204)	**6.00**	(153)	**9.07**	(230)	**7.00**	(178)	**11.07**	(281)
10”	(254)	**7.00**	(178)	**11.07**	(281)	**8.00**	(204)	**13.07**	(332)
12”	(305)	**8.00**	(204)	**13.07**	(332)	**9.00**	(229)	**15.07**	(383)
14”	(356)	**N/A**		**N/A**		**10.00**	(254)	**17.07**	(434)
16”	(407)	**N/A**		**N/A**		**11.00**	(279)	**19.07**	(484)

Dimensions in inches (mm)

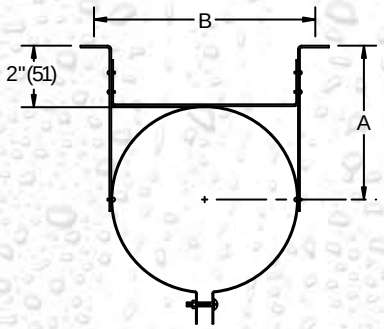

WALL SUPPORT (WS)

The wall support is used to secure the vent to interior and exterior walls, maintaining clearance and providing alignment. Do not exceed 30 ft. distance between supports on interior walls. Do not exceed 8 ft. between supports on exterior walls.

PIPE I.D.		CGSW						CG					
		A		B		C		A		B		C	
6”	(153)	**6**	(153)	**5**	(127)	**8**	(204)	**8**	(204)	**5**	(127)	**8**	(204)
8”	(204)	**8**	(204)	**6**	(153)	**10**	(254)	**10**	(254)	**6**	(153)	**10**	(254)
10”	(254)	**10**	(254)	**7**	(178)	**12**	(305)	**12**	(305)	**7**	(178)	**12**	(305)
12”	(305)	**12**	(305)	**8**	(204)	**14**	(356)	**14**	(356)	**8**	(204)	**14**	(356)
14”	(356)	**14**	(356)	**13**	(330)	**16**	(407)	**16**	(407)	**13**	(330)	**16**	(407)
16”	(407)	**16**	(407)	**14**	(356)	**18**	(457)	**18**	(457)	**14**	(356)	**18**	(457)
18”	(457)	**18**	(457)	**15**	(381)	**20**	(508)	**20**	(508)	**15**	(381)	**20**	(508)
20”	(508)	**20**	(508)	**16**	(407)	**22**	(559)	**22**	(559)	**16**	(407)	**22**	(559)
22”	(559)	**22**	(559)	**17**	(432)	**24**	(610)	**24**	(610)	**17**	(432)	**24**	(610)
24”	(610)	**24**	(610)	**18**	(457)	**26**	(660)	**26**	(660)	**18**	(457)	**26**	(660)

Dimensions in inches (mm)

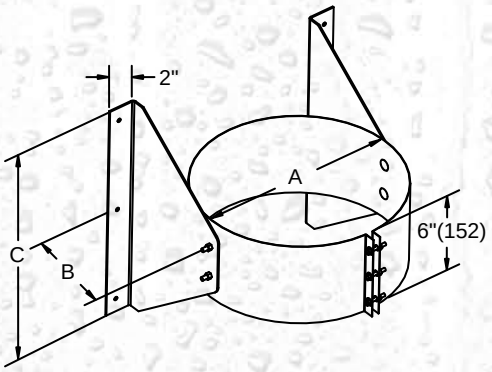

PLATE SUPPORT (PS)

Provides either vertical or horizontal rigid support.

Vertical Support Capacities

CGSW 6”-12” 30 ft. Max.
CGSW 14”-24” 20 ft. Max.
CG 6”-24” 30 ft. Max

PIPE I.D.		CGSW				CG			
		A		B		A		B	
6”	(153)	**17.00**	(432)	**13.50**	(343)	**17.00**	(432)	**13.50**	(343)
8”	(204)	**17.00**	(432)	**15.50**	(394)	**17.00**	(432)	**15.50**	(394)
10”	(254)	**17.00**	(432)	**17.50**	(445)	**17.00**	(432)	**17.50**	(445)
12”	(305)	**19.50**	(495)	**22.63**	(575)	**19.50**	(495)	**22.63**	(575)
14”	(356)	**29.50**	(749)	**30.54**	(776)	**21.50**	(546)	**22.63**	(575)
16”	(407)	**31.50**	(800)	**32.54**	(827)	**24.00**	(610)	**24.63**	(626)
18”	(458)	**33.50**	(851)	**34.54**	(877)	**25.50**	(648)	**31.13**	(791)
20”	(508)	**35.50**	(902)	**36.54**	(928)	**27.50**	(699)	**31.13**	(791)
22”	(559)	**37.50**	(953)	**38.54**	(979)	**29.50**	(749)	**31.13**	(791)
24”	(610)	**39.50**	(1003)	**40.54**	(1030)	**31.50**	(800)	**37.13**	(943)

Dimensions in inches (mm).

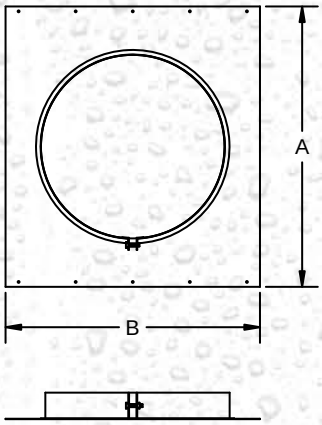

GUY RING (GR)

NOTE: Used to provide lateral guidance and allow for thermal expansion.

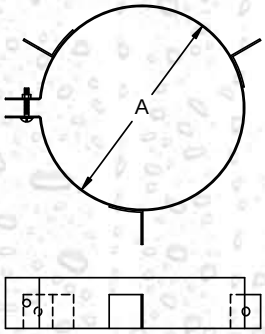

PIPE I.D.		CGSW		CG	
		A		A	
6”	(153)	**6**	(153)	**8**	(204)
8”	(204)	**8**	(204)	**10**	(254)
10”	(254)	**10**	(254)	**12**	(305)
12”	(305)	**12**	(305)	**14**	(356)
14”	(356)	**14**	(356)	**16**	(407)
16”	(407)	**16**	(407)	**18**	(458)
18”	(458)	**18**	(458)	**20**	(508)
20”	(508)	**20**	(508)	**22**	(559)
22”	(559)	**22**	(559)	**24**	(610)
24”	(610)	**24**	(610)	**26**	(660)

Dimensions in inches (mm).

SINGLE WALL BOILER ADAPTER (SBA)

Flow Resistance K= same as pipe

NOTE: Used to attach vent to straight shank outlets.

NOTE: Casing End Closure(CEC) not required with CGSWSBA. Casing End Closure(CEC) included with CGSBA.

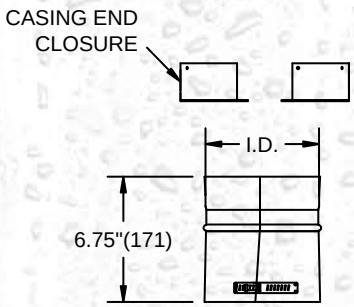

REDUCING CONNECTOR (RC)

Flow Resistance K= same as pipe

A= Diameter to be specified per application.
e.g. 6CG4RC

NOTE: Used to attach vent to an outlet source of a smaller diameter.

NOTE: Casing End Closure(CEC) not required with CGSWRC. Casing End Closure(CEC) included with CGRC.

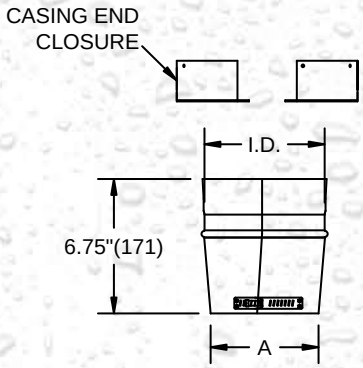

SEALANT

P077 - Joint Sealant for sealing vent joints when continuous operating temperatures do not exceed 500°F(260° C), and intermittent temperatures do not exceed 600°F(316°C).

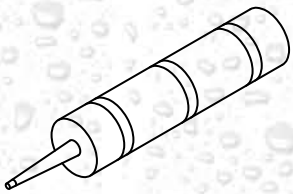

PIPE I.D.		Joints Per Tube
6”	(153)	5
8”	(204)	5
10”	(254)	5
12”	(305)	4
14”	(356)	4
16”	(407)	4
18”	(458)	3
20”	(508)	3
22”	(559)	3
24”	(610)	2

Dimensions in inches(mm)

DESIGN CHECKLIST

In order to quickly and accurately design a vent installation, Metal-Fab’s Engineering Department needs basic information about the system. Listed below are those items about which information is needed:

1. Application (Boilers, Fume Exhaust, Water Heater, etc.).
2. BTU Input and CO_2 % of the flue gas.
3. Equipment Outlet Pressure:
   a. Forced draft with positive, negative or zero inches of water at appliance outlet.
   b. Induced draft capability and how much.
   c. Barometric damper.
4. Total Vertical Stack Height figured from appliance outlet.
5. Connector rise (piping from the appliance to the centerline of breeching).
6. The total length of breeching for one appliance application, or the system length between the vent outlet center line for multiple boiler appliance installations.
7. Single wall or double wall breeching.
8. Type of roof penetration or chase installation.
9. Type of construction - combustible, noncombustible, or fire-rated.
10. Obstructions or dimensional restrictions that may exist.

Receipt of this information will speed the design process.

Thank you.

PART 1 GENERAL

1.1 SCOPE

A. The provision of Section _____, Mechanical General Specifications apply to all work in this section.
B. This section includes specifications for furnishing and installing Positive Pressure Vent systems.

1.2 SUBMITTAL

Submit the following in accordance with Section_____:
A. Catalog Cuts
B. Sizing Calculations
C. Installation Drawings
D. Installation Instructions
E. Warranty

1.3 QUALITY ASSURANCE

A. APPLICABLE STANDARDS
All products furnished under this section shall conform to the requirements of NFPA-54 where applicable and shall comply with and be listed to UL1738; Standard for Venting Systems for Gas-Burning Appliances, Category II, III, and IV. Components coming in direct contact with products of combustion shall carry the appropriate UL and cUL Listing mark or label.
B. Manufacturer shall provide a limited lifetime warranty against manufacturing defects in material and workmanship provided the installation is in accordance with manufacturer's installation instructions.

PART 2 PRODUCTS

2.1 POSITIVE PRESSURE VENT

A. The vent shall be of the double wall (single wall), factory-built type for use on condensing appliances or pressurized venting systems serving Category II, III, or IV appliances or as specified by the equipment manufacturer.
B. Maximum temperature shall not exceed 550°F (288°C).
C. Vent shall be listed for an internal static pressure of 10" w.g. and tested to 25" w.g. for 3"-5" diameters; 6" w.g. and tested to 15" w.g. for 6"-24" diameters.
D. (CG only) Vent shall be constructed of an inner and outer wall with a 1" annular insulating air space.
E. The inner wall (flue/vent) shall be constructed of AL29-4C, superferritic stainless steel, .015 thickness for 3"-12" diameters and .024 thickness for 14"-24" diameters.
F. The outer wall (CG only) shall be constructed of Aluminized steel, .018 thickness for 6"-12" diameters and .024 thickness for 14"-24" diameters.

Optional: The outer wall (CG only) shall be constructed of type 430, 304, or 316 stainless steel, .018 thickness for 3"-12" diameters and .024 thickness for 14"-24" diameters.
G. Inner and outer walls shall be connected by means of spacer clips that maintain the concentricity of the annular space and allow unobstructed differential thermal expansion of the inner and outer walls.

H. All parts exposed to the weather shall be protected by one (1) coat of corrosion and heat resistant base primer and one (1) coat of heat resistant paint.

Optional: All vent parts exposed to the weather shall be stainless steel.

I. All supports, roof or wall penetrations, terminations, appliance connectors and drain fittings, required to install the vent system shall be included.

J. Roof penetration pieces shall be UL listed and provided by the vent manufacturer. Roof curbs shall be required on roofs greater than 12:12 pitch.

K. Where exposed to weather, the casing joints shall be sealed to prevent rainwater from entering the space between inner and outer walls.

L. Vent shall terminate in accordance with installation instructions and local codes.

PART 2.2 AVAILABLE MANUFACTURERS

Vent shall be a Corr/Guard model CG Double Wall and/or CGSW Single Wall as manufactured by Metal-Fab, Inc.

PART 3 EXECUTION

A. Store delivered materials inside, out of the weather. Protect materials from accidental damage or vandalism.
B. Installation shall conform to the manufacturer's installation instructions, UL listing and state or local codes.
C. Support chimney from building structure using rigid structural shapes for attachment of fixed-point supports (Plate Support Assembly). Anchor supports to structure by welding, bolting, steel expansion anchors, or concrete inserts. Size of structural shapes shall be in accordance with manufacturer's recommendations.
D. Coordinate installation of dampers or fans. Dampers or fans shall be supported independently from the vent sections. Protect vent from twist or movement due to fan torque or vibration.
E. Protect incomplete vent installations by attaching temporary closures over open ends of sections.
F. Clean all chimney and breechings of dust and debris prior to final connection to appliances.

LIMITED LIFETIME WARRANTY

Specify...

METAL-FAB INC.

GAS VENTS

Type B
3"-30" Diameter
Type BW
Oval 4"-6"

SPECIAL GAS VENTS

Corr/Guard® (AL29-4C)
Condensing Appliance Vent
Single Wall & Double Wall
3"-24" Diameter

CLASS A CHIMNEY

Temp/Guard®
6"-16" Diameter

PRESSURE STACK
BOILER EXHAUST
ENGINE EXHAUST
FUME EXHAUST

PSW-Single Wall
PIC-1" Air Insulated Double Wall
IPIC-1 1" Ceramic Insulated Double Wall
IPIC-2 2" Ceramic Insulated Double Wall
IPIC-4 4" Ceramic Insulated Double Wall
6"-48" Diameter

FACTORY-BUILT GREASE DUCT

PSW-Single Wall
PIC-1" Air Insulated Double Wall
1G-1 Hour Rated
2G-2 Hour Rated
4G-2 Hour Rated-Zero Clearance
6"-48" Diameter

Lowest Overall Clearances

The Most Choices...
Better Solutions!

Leading the Industry to Higher Standards!

METAL-FAB INC.

www.metal-fabinc.com
info@www.metal-fabinc.com
800-835-2830

Litho in U.S.A. ©2006 Metal-Fab, Inc.

Form No. L1711-6/06